8. Exploded Views and Parts List

Contents

8.1 Main · · · · · · · · · · · · · · · · · · · 8-2
8.2 Top Cover · · · · · · · · · · · · · · · · · 8-5
8.3 Rear Cover · · · · · · · · · · · · · · · · 8-7
8.3.2 Rear Cover(Transfer Unit) · · · · · · · · 8-9
8.4 Front Cover · · · · · · · · · · · · · · · · 8-11
8.5 Main Driver · · · · · · · · · · · · · · · · 8-12
8.6 Main Frame · · · · · · · · · · · · · · · · 8-16
8.7 LSU Cover · · · · · · · · · · · · · · · · · 8-20
8.8 Fuser Unit · · · · · · · · · · · · · · · · 8-22
8.9 ELA-UNIT OPC DEV · · · · · · · · · · · · 8-25
8.10 ITB Unit · · · · · · · · · · · · · · · · · 8-27
8.11 Casstte Unit · · · · · · · · · · · · · · · 8-30

Samsung Color Laser Printer

The keynote of Product

[The keynote of Product]

[Series Model]
- CLP-300: B/W 16 ppm, Color 4 ppm, SPL-C
- CLP-300N: CLP-300 + Network

[Resolution]
- 2400 x 600 dpi

[CPU]
- Samsung CorrusM 170MHz

[Interface]
- CLP-300 : USB 2.0
- CLP-300N : USB 2.0, Ethernet 10/100 Base TX

[Consumables]
- black toner cartridge (Initial: 15K/Sales: 2K)
- color toner cartridge (Initial: 0.7K/Sales: 1K)
- Waste toner box

[Paper Handling]
- 150 sheets Semi-cassette
- 1 sheet manual slot
- 150 sheet Face-Down

IT-spares.eu

8.1 Main

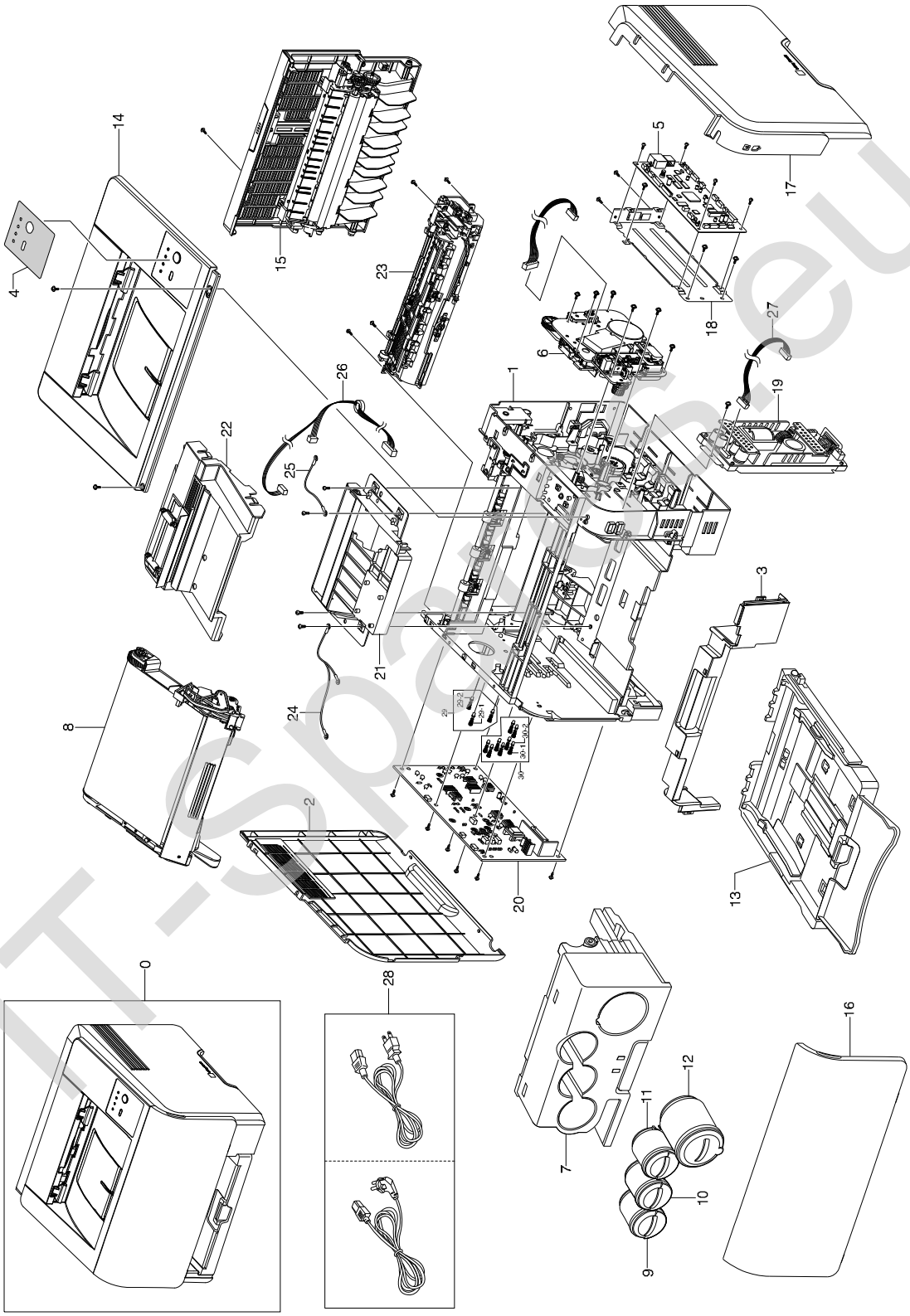

IT-spare.eu

Main Parts List

SA : SERVICE AVAILABLE, SNA : SERVICE not AVAILABLE

Drawer#	SEC Code	Description	QT'y	Service	Remark
8.1-1	JC97-02931A	MEA UNIT-FRAME	1	SA	
8.1-2	JC63-00842A	COVER-M-LEFT SIDE	1	SA	
8.1-3	JC63-00847A	COVER-M-DUMMY FRONT	1	SA	
8.1-4	JC63-01102A	SHEET-COVER TOP	1	SA	CLP-300N
8.1-4	JC63-01102B	SHEET-COVER TOP	1	SA	CLP-300
8.1-5	JC92-01900B	PBA MAIN-CONTROLLER	1	SA	CLP-300
8.1-5	JC92-01901B	PBA MAIN-CONTROLLER	1	SA	CLP-300N
8.1-6	JC96-03608A	ELA UNIT-DRIVE MAIN	1	SA	
8.1-7	JC96-03610A	ELA UNIT-OPC DEV SET	1	SNA	
8.1-8	JC96-03611C	ELA UNIT-ITB SET	1	SA	
8.1-9	JC96-03615A	ELA UNIT-TONER TANK C	1	SNA	
8.1-10	JC96-03614A	ELA UNIT-TONER TANK M	1	SNA	
8.1-11	JC96-03613A	ELA UNIT-TONER TANK Y	1	SNA	
8.1-12	JC96-03616A	ELA UNIT-TONER TANK K	1	SNA	
8.1-13	JC97-02332A	MEA-UNIT CASSETTE	1	SA	
8.1-14	JC97-02439A	MEA UNIT-COVER TOP	1	SA	
8.1-15	JC97-02440A	MEA UNIT-COVER REAR	1	SA	
8.1-16	JC97-02659A	MEA-UNIT COVER FRONT	1	SA	
8.1-17	JC63-00845A	COVER-M-RIGHT SIDE	1	SA	CLP-300N
8.1-18	JC63-00863A	SHIELD-P-MAIN LOWER	1	SNA	
8.1-19	-	SMPS ASS'Y TYPE2	1	SNA	
8.1-19-1	JC44-00095A	SMPS-PSP TYPE2 V1	1	SA	110V
8.1-19-1	JC44-00096A	SMPS-PSP TYPE2 V2C	1	SA	220V
8.1-19-2	JC63-01259A	SHIELD-SMPS	1	SNA	
8.1-19	-	SMPS-ASS'Y TYPE3	1	SA	
8.1-19-1	JC44-00097A	SMPS-PSP TYPE3 V1	1	SA	110V
8.1-19-1	JC44-00090A	SMPS-PSP TYPE3 V2C	1	SA	220V
8.1-19-2	JC63-00864A	SHIELD-P-SMPS	1	SNA	
8.1-20	JC44-00138A	HVPS	1	SA	
8.1-21	JC59-00018E	UNIT-LSU	1	SA	
8.1-22	JC97-02656A	MEA UNIT-COVER LSU	1	SA	
8.1-23	JC96-03609A	ELA UNIT-FUSER 220V	1	SA	220V
8.1-23	JC96-03609B	ELA UNIT-FUSER 110V	1	SA	110V
8.1-24	JC39-00579A	CBF HARNESS-LSU S/W	1	SA	
8.1-25	JC39-00496A	CBF HARNESS-LSU GND	1	SA	
8.1-26	JC39-00483A	CBF HARNESS-LSU	1	SA	
8.1-27	JC39-00670A	HARNESS-SMPS	1	SA	
8.1-28	-	CBF-POWER CORD	1	SA	
8.1-29	JC97-01401A	MEA UNIT-TERMINAL	3	SA	
8.1-29-1	JC61-70929A	SPRING ETC-HV LARGE	1	SA	
8.1-29-2	JC70-40912A	ICT-SHAFT HV LARGE	1	SA	
8.1-30	JC97-01771A	MEA UNIT-TERMINAL S	8	SA	
8.1-30-1	JC61-70929A	SPRING ETC-HV LARGE	1	SA	

IT-Spares.eu

Main Parts List

SA : SERVICE AVAILABLE, SNA : SERVICE not AVAILABLE

Drawer#	SEC Code	Description	QT'y	Service	Remark
8.1-30-2	JC70-00050A	IPR-TERMINAL	1	SNA	
-	JC67-00160A	CAP-NETWORK	1	SNA	
-	-	BOX(P)-MAIN	1	SA	

IT-Spares.eu

8.2 Top Cover

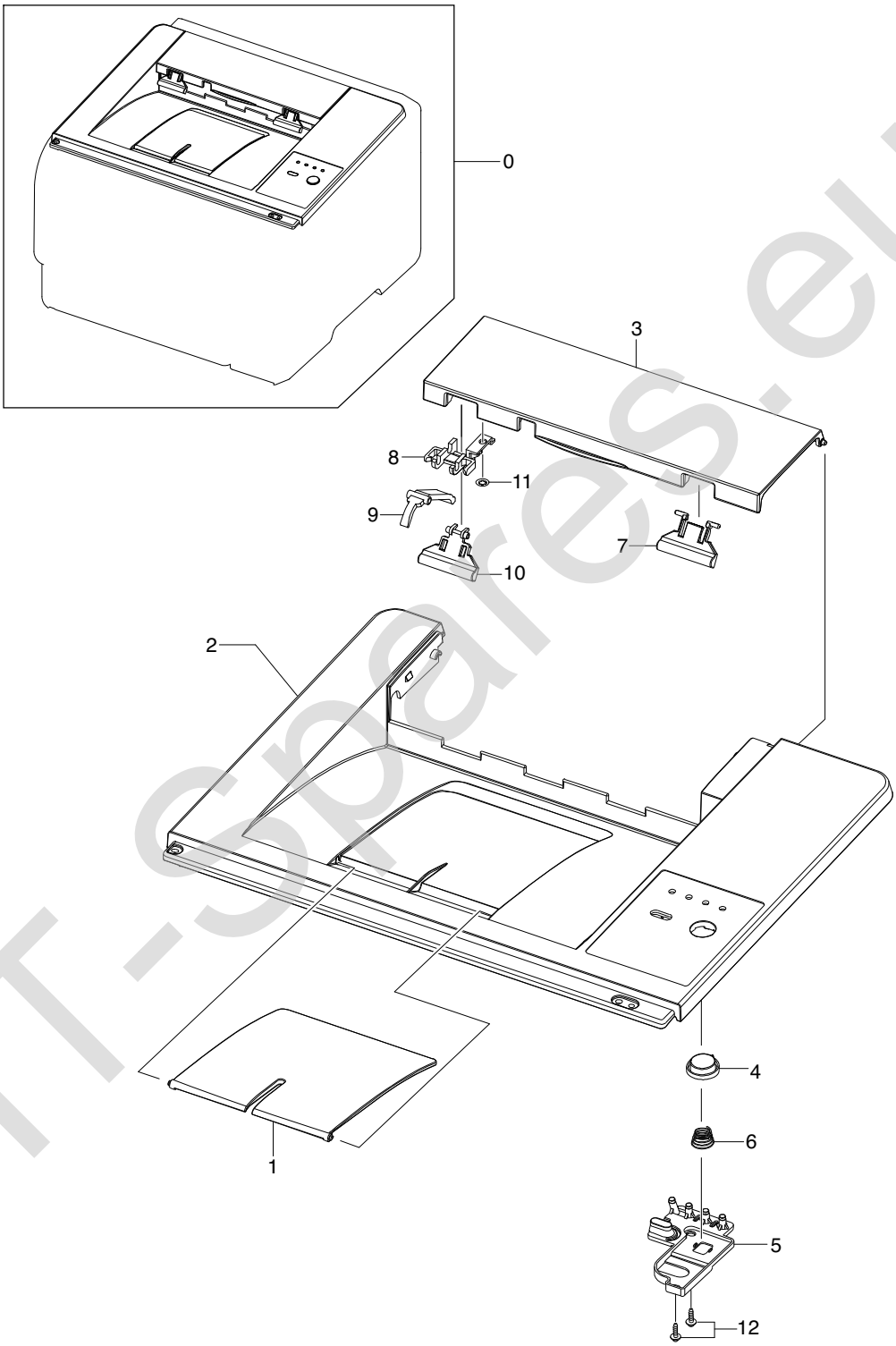

IT-spares.eu

Top Cover Parts List

SA : SERVICE AVAILABLE, SNA : SERVICE not AVAILABLE

Drawer#	SEC Code	Description	QT'y	Service	Remark
8.2-0	JC97-02439A	MEA UNIT-COVER TOP	1	SA	
8.2-1	JC61-01460A	GUIDE-M-STACKER COVER	1	SNA	
8.2-2	JC63-00846A	COVER-M-TOP	1	SNA	
8.2-3	JC63-00843A	COVER-M-JAM COVER	1	SNA	
8.2-4	JC64-00211A	KEY-M-OP1	1	SA	
8.2-5	JC63-00860A	COVER-M-LED	1	SNA	
8.2-6	6107-001169	SPRING-CS	1	SA	
8.2-7	JC72-01343A	PMO-SUB M STACKER	1	SA	
8.2-8	JC61-01761A	HOLDER-LEVER BLOCKING	1	SNA	
8.2-9	JC66-01297A	LEVER-MID BLOCKING	1	SNA	
8.2-10	JC66-01296A	LEVER-BLOCKING	1	SNA	
8.2-11	6044-000001	RING-CS	1	SNA	
8.2-12	6002-000440	SCREW-TAPPING	2	SNA	

IT-Spares.eu

8.3 Rear Cover

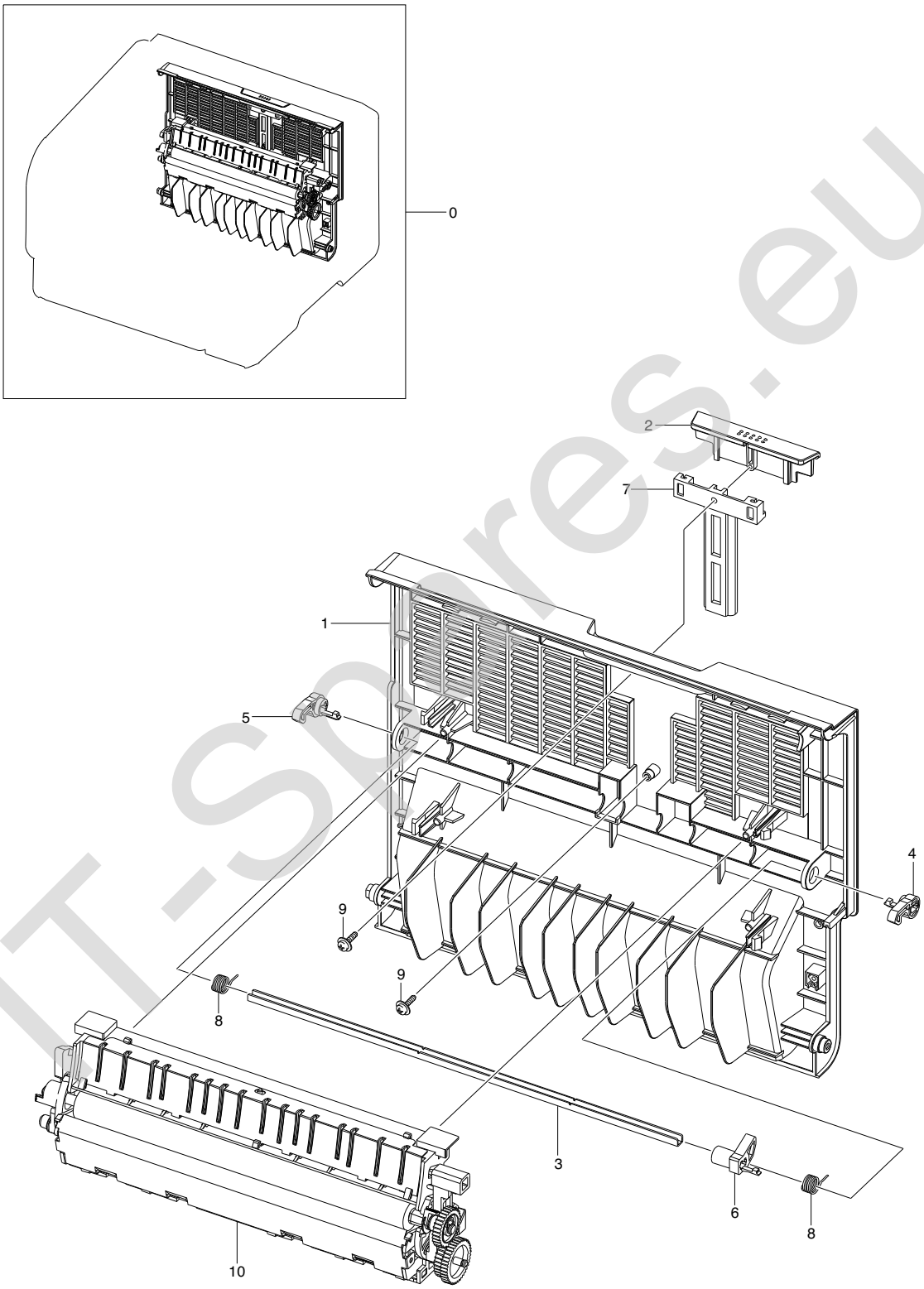

IT-Spares.eu

Rear Cover Parts List

SA : SERVICE AVAILABLE, SNA : SERVICE not AVAILABLE

Drawer#	SEC Code	Description	QT'y	Service	Remark
8.3-0	JC97-02440A	MEA UNIT-COVER REAR	1	SA	
8.3-1	JC63-00844A	COVER-M-REAR	1	SNA	
8.3-2	JC64-00215A	BUTTON-M-OPEN REAR	1	SNA	
8.3-3	JC66-01089A	SHAFT-P-LOCKBAR REAR	1	SNA	
8.3-4	JC61-01461A	HOLDER-M-HOOK REAR R	1	SNA	
8.3-5	JC61-01456A	HOLDER-M-HOOK REAR L	1	SNA	
8.3-6	JC61-01462A	HOLDER-M-HOOK REAR C	1	SNA	
8.3-7	JC66-01071A	LEVER-M-REAR LOCK	1	SNA	
8.3-8	6107-001268	SPRING-TS	2	SA	
8.3-9	6002-000440	SCREW-TAPPING	2	SNA	
8.3-10	JC96-03990A	ELA UNIT-TRANSFER	1	SA	

IT-Spares.eu

8.3.2 Rear Cover(Transfer Unit)

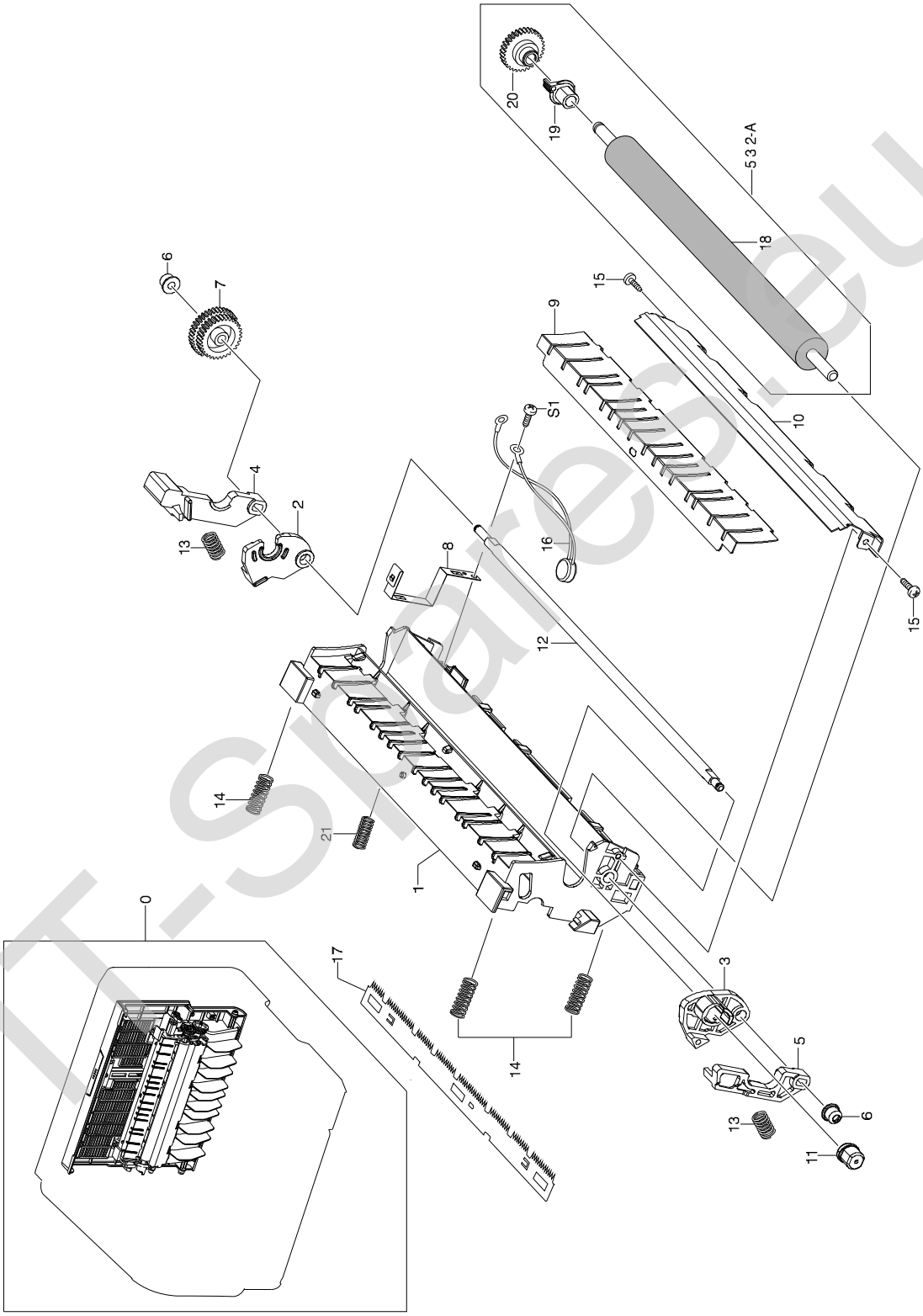

IT-Spares.eu

Rear Cover(Transfer Unit) Parts List

SA : SERVICE AVAILABLE, SNA : SERVICE not AVAILABLE

Drawer#	SEC Code	Description	QT'y	Service	Remark
8.3.2-0	JC96-03990A	ELA UNIT-TRANSFER	1	SA	
8.3-2-1	JC61-01466A	FRAME-M-T2 BASE	1	SNA	
8.3.2-2	JC66-01121A	LEVER-M-T2 HOLDER R	1	SNA	
8.3.2-3	JC66-01122A	LEVER-M-T2 HOLDER L	1	SNA	
8.3.2-4	JC66-01074A	LEVER-M-RELEASE R	1	SNA	
8.3.2-5	JC66-01075A	LEVER-M-RELEASE L	1	SNA	
8.3.2-6	JC61-01469A	HOLDER-M-LOCATE SHAFT	2	SNA	
8.3.2-7	JC66-01081A	GEAR-RDCN T2 DRIVE	1	SA	
8.3.2-8	JC61-01467A	PLATE-P-T2 GROUND	1	SNA	
8.3.2-9	JC61-01468A	GUIDE-P-T2 OUTPUT	1	SNA	
8.3.2-10	JC61-01470A	GUIDE-P-T2 INPUT	1	SNA	
8.3.2-11	JC61-01543A	BUSH-CHARGE LEFT	1	SNA	
8.3.2-12	JC66-01072A	SHAFT-LOCATE	1	SNA	
8.3.2-13	6107-001290	SPRING-CS	2	SA	
8.3.2-14	6107-001278	SPRING-CS	3	SA	
8.3.2-16	JC39-00036A	CBF HARNESS-OPE GND	1	SA	
8.3.2-17	JC70-10232A	IPR-PLATE SAW	1	SA	
8.3.2-18	JC66-01104A	ROLLER-TRANSFER	1	SNA	
8.3.2-19	JC61-01471A	HOLDER-M-T2 ROLLER R	1	SNA	
8.3.2-20	JC66-01073A	GEAR-T2 ROLLER	1	SA	
8.3.2-21	6107-001246	SPRING-CS	1	SNA	
8.3.2-A	JC97-02628A	MEA UNIT-T2 ROLLER	1	SA	
8.3.2-S1	6003-000282	SCREW-TAPTITE	3	SA	

IT-Spares.eu

8.4 Front Cover

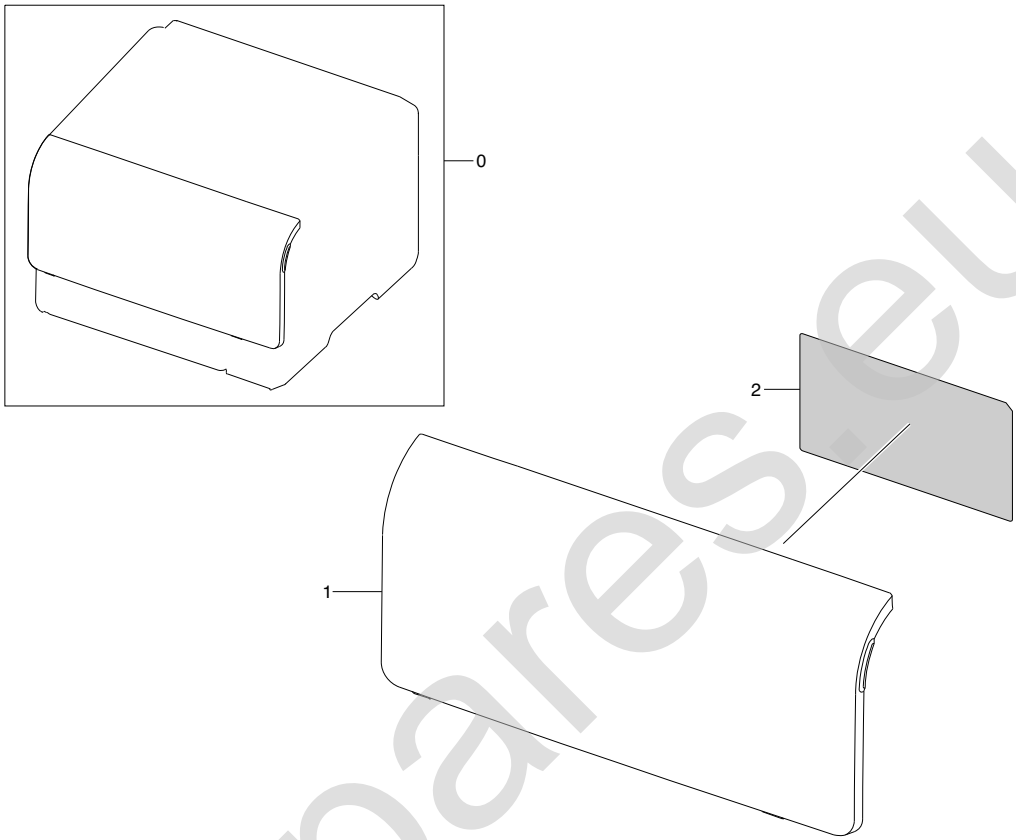

Front Cover Parts List

SA : SERVICE AVAILABLE, SNA : SERVICE not AVAILABLE

Drawer#	SEC Code	Description	QT'y	Service	Remark
8.4-0	JC97-02659A	MEA-UNIT COVER FRONT	1	SA	
8.4-1	JC63-00841A	COVER-M-FRONT	1	SNA	
8.4-2	JC68-01678A	LABEL-INSTRUCTION	1	SNA	

IT-Spares.eu

8.5 Main Driver

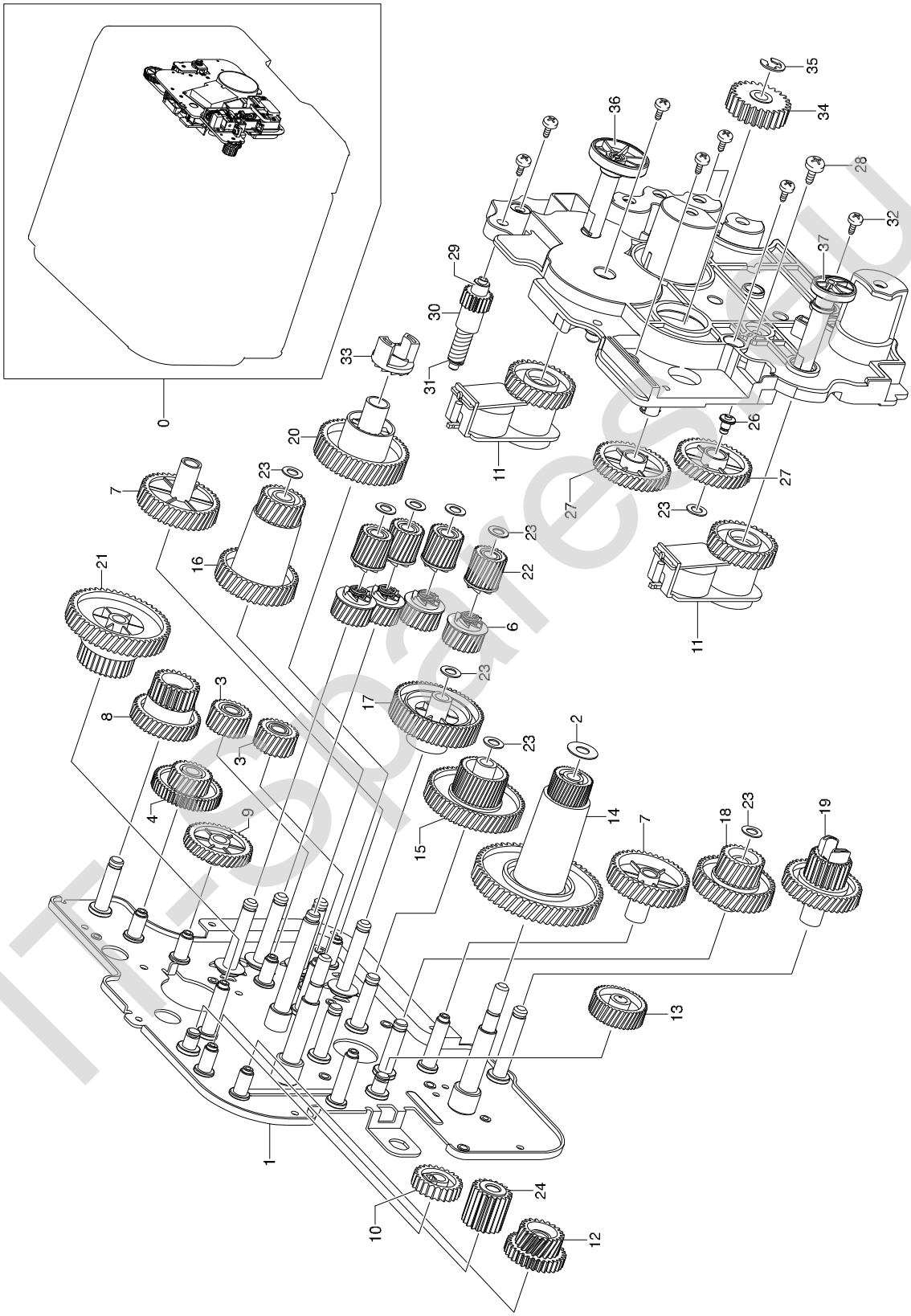

ITspares.ru

Main Driver(Continued)

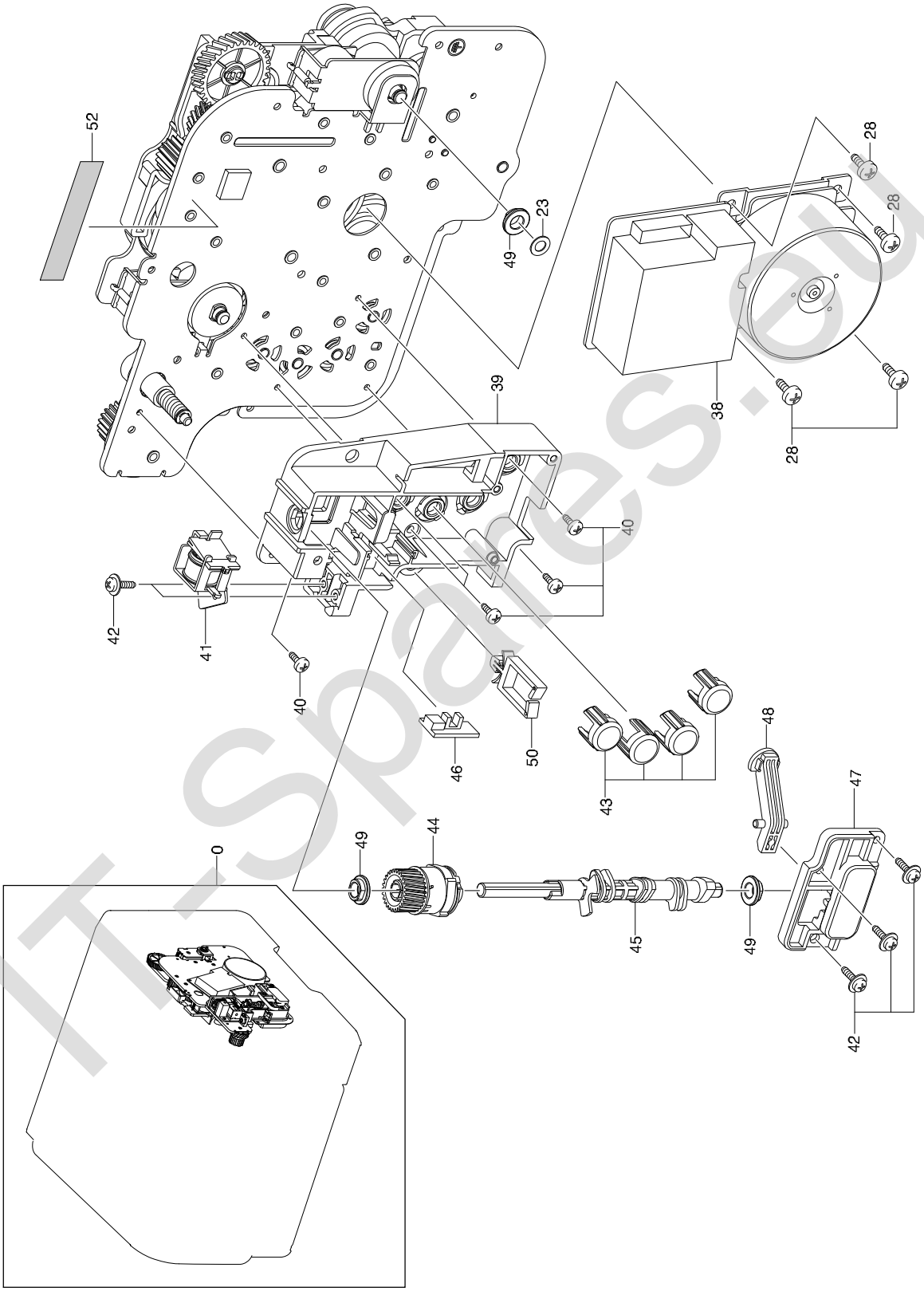

IT-Spares.eu

Main Drive Parts List

SA : SERVICE AVAILABLE, SNA : SERVICE not AVAILABLE

Drawer#	SEC Code	Description	QT'y	Service	Remark
8.5-0	JC96-03608A	ELA UNIT-DRIVE MAIN	1	SA	
8.5-1	JC61-01450A	BRACKET-P-DRIVE MOTOR	1	SNA	
8.5-3	JC66-01042A	GEAR-IDLE DEVE Z19	2	SA	
8.5-4	JC66-01052A	GEAR-RDCN DEVE CAM	1	SA	
8.5-5	JC66-01041A	GEAR-DEVE COUPLING	4	SA	
8.5-6	6107-001169	SPRING-CS	4	SA	
8.5-7	JC66-01047A	GEAR-IDLE Z39	2	SA	
8.5-8	JC66-01065A	GEAR-TONER DRIVE	1	SA	
8.5-9	JC66-01046A	GEAR-IDLE Z33	1	SA	
8.5-10	JC66-00763A	GEAR-M-PICK UP IDLE	1	SA	
8.5-11	JC47-00007E	MEP-CLUTCH CAM	2	SA	
8.5-12	JC66-01208A	GEAR-RDCN FUSER CAM	1	SA	
8.5-13	JC66-01045A	GEAR-IDLE ITB Z43	1	SA	
8.5-14	JC66-01048A	GEAR-ITB DRIVE	1	SA	
8.5-15	JC66-01054A	GEAR-RDCN OPC	1	SA	
8.5-16	JC63-01049A	SHEET-HOUSING ITB	1	SNA	
8.5-17	JC66-01051A	GEAR-RDCN DEVE	1	SA	
8.5-18	JC66-01055A	GEAR-RDCN P PATH	1	SA	
8.5-19	JC66-01050A	GEAR-PICK UP DRIVE	1	SA	
8.5-20	JC66-01044A	GEAR-FUSER DRIVE 1	1	SA	
8.5-21	JC66-01053A	GEAR-RDCN EXIT	1	SA	
8.5-22	JC66-01043A	GEAR-DEVE DRIVE	4	SA	
8.5-23	6031-000019	WASHER-PLAIN	1	SA	
8.5-24	JC66-00771A	GEAR- M IDLE PICKUP	1	SA	
8.5-25	JC61-01459A	BRACKET-M-DRIVE FRONT	1	SNA	
8.5-26	JC66-01061A	SHAFT-IDLE D8	1	SNA	
8.5-27	JC66-01064A	GEAR-IDLE Z37	2	SA	
8.5-28	6003-000152	SCREW-TAPTITE	1	SA	
8.5-29	JC66-01060A	SHAFT-WORM GEAR	1	SNA	
8.5-30	JC66-01057A	GEAR-WORM DEVE CAM	1	SA	
8.5-31	6044-000159	RING-C	1	SA	
8.5-32	6001-000130	SCREW-MACHINE	7	SA	
8.5-33	JC66-01070A	LATCH-M-HUB CLUTCH	1	SNA	
8.5-34	JC66-01155A	GEAR-FUSER RDCN OUT V	1	SNA	
8.5-35	6044-000125	RING-E	1	SA	
8.5-36	JC66-01068A	SHAFT-M-T2 CAM	1	SA	
8.5-37	JC66-01067A	SHAFT-M-ITB CLEAN CAM	1	SA	
8.5-38	JC31-00041A	MOTOR DC-DEVE DRIVE	1	SA	
8.5-39	JC61-01458A	BRACKET -M-DEVE CAM	1	SNA	
8.5-40	6003-000152	SCREW-TAPTITE	1	SA	
8.5-41	JC33-00020A	SOLENOID-DEVE	1	SA	

IT-spares.eu

Main Drive Parts List

SA : SERVICE AVAILABLE, SNA : SERVICE not AVAILABLE

Drawer#	SEC Code	Description	QT'y	Service	Remark
8.5-42	6003-000152	SCREW-TAPTITE	7	SA	
8.5-43	JC67-00130A	CAP-M-PUSH COUPLING	4	SA	
8.5-44	JC97-01788B	MEA UNIT-CLUTCH DEV	1	SA	
8.5-45	JC66-01066A	SHAFT-M-DEVE CAM	1	SA	
8.5-46	JC92-01720A	PBA SUB-DEVE HOME	1	SA	
8.5-47	JC61-01453A	HOLDER-M-LINK BLACK	1	SA	
8.5-48	JC66-01097A	LINK-M-PUSH BLACK CAP	1	SA	
8.5-49	JC61-00699A	BUSH-D6/L4	3	SA	
8.5-50	6502-000132	CABLE CLAMP	1	SA	
8.5-52	JC68-10914D	LABEL(P)-SERIAL NO	1	SNA	

IT-Spares.eu

8.6 Main Frame

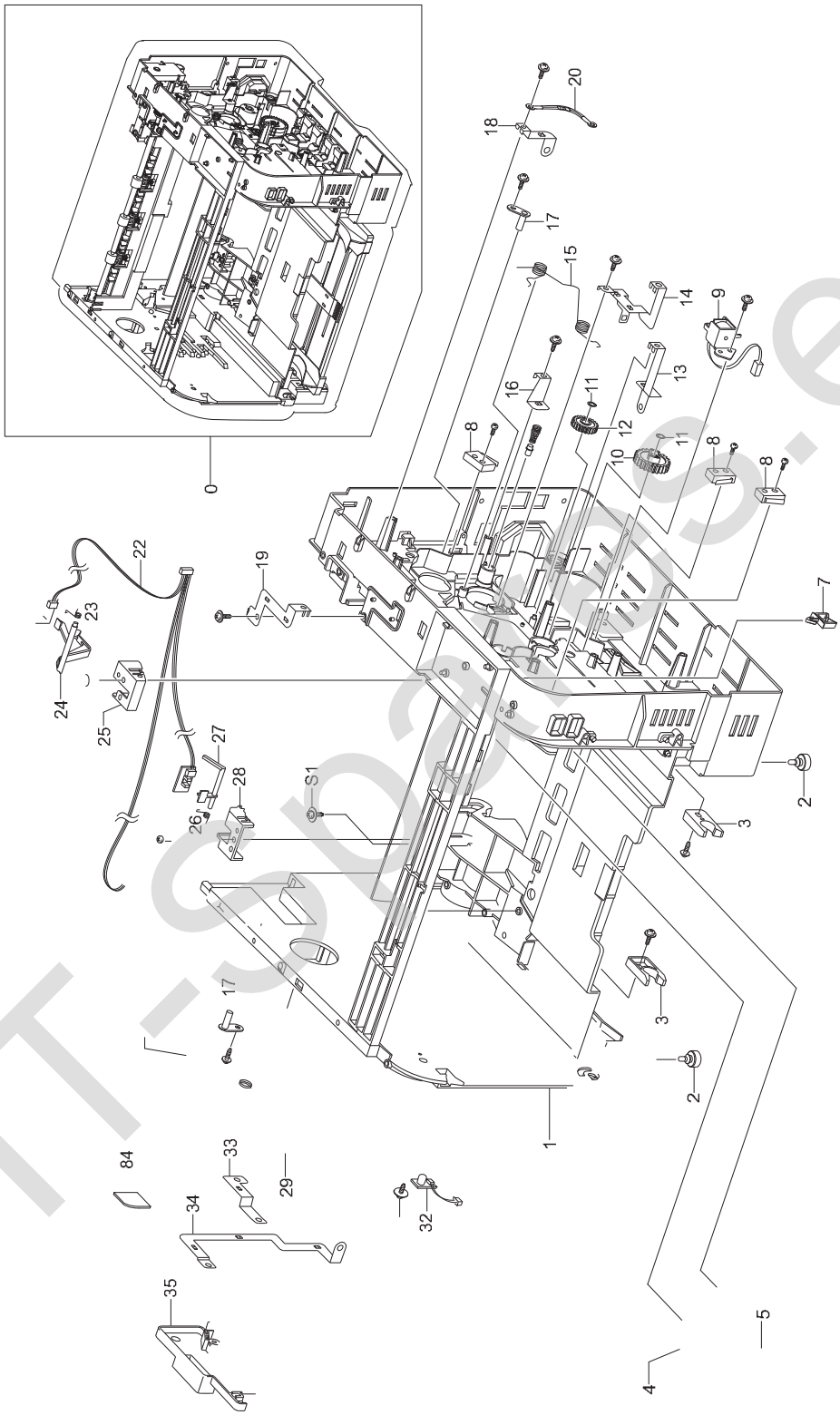

IT-spares.eu

Main Frame(Continued)

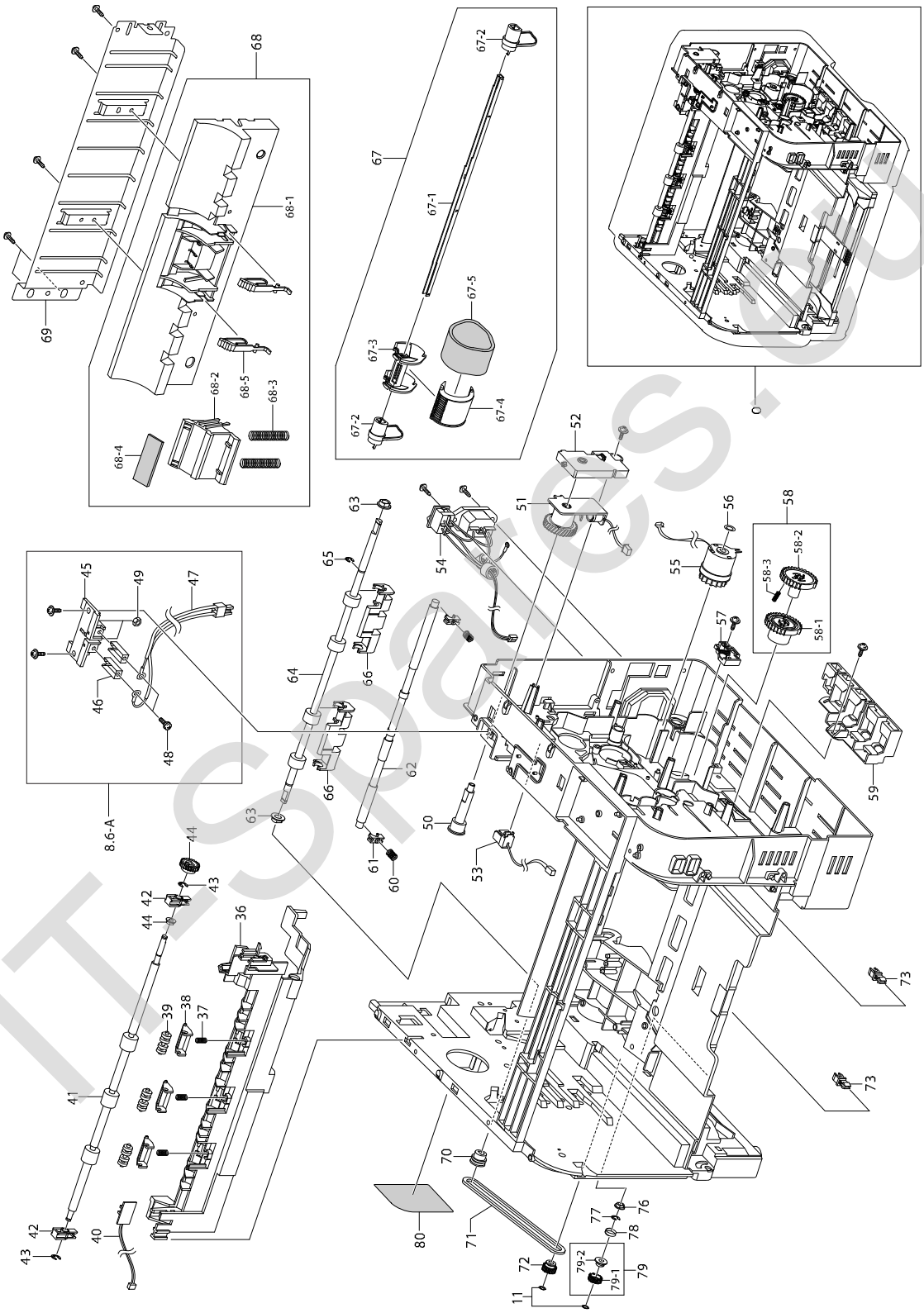

ITspares.eu

Main Frame Parts List

SA : SERVICE AVAILABLE, SNA : SERVICE not AVAILABLE

Drawer#	SEC Code	Description	QT'y	Service	Remark
8.6-0	JC97-02931A	MEA UNIT-FRAME	1	SA	
8.6-1	JC61-01443A	FRAME-M BASE GOGH	1	SNA	
8.6-2	JC61-40001A	FOOT-ML80	2	SA	
8.6-3	JC66-00050A	CAM-CATCH	2	SA	
8.6-4	JC61-01521A	PLATE-P-DRAW CONNECTOR	1	SNA	
8.6-5	JC39-00488A	CBF HARNESS-MAIN DRAW	1	SA	
8.6-6	JC66-00810A	GEAR-EXIT DRV17	1	SA	
8.6-7	6502-001093	CABLE CLAMP	1	SA	
8.6-8	JC39-00498A	CBF HARNESS-COVER SW	1	SA	
8.6-9	JC33-00015C	SOLENOID-PICK UP	1	SA	
8.6-10	JC66-01056A	GEAR-REGI DRIVE	1	SA	
8.6-11	6044-000001	RING-CS	2	SNA	
8.6-12	JC66-00346A	GEAR-MP/DUP DRV	1	SA	
8.6-13	JC61-01483A	PLATE-P-GROUND LSU	1	SNA	
8.6-14	JC61-01485A	PLATE-P-GROUND REGI	1	SNA	
8.6-15	JC61-01547A	SPRING ETC-OPC LOCK R	1	SA	
8.6-16	JC61-01484A	PLATE-P-GROUND T2	1	SNA	
8.6-17	JC61-01537A	PLATE-P-SHAFT LACK	2	SNA	
8.6-18	JC61-01482A	PLATE-P-GROUND FUSER	1	SNA	
8.6-19	JC61-01489A	PLATE-P-GROUND EXIT	1	SNA	
8.6-20	JC39-00302A	CBF HARNESS-100M GND	1	SA	
8.6-22	JC96-04021A	ELA HOU-REGI EMP MP	1	SA	
8.6-23	JB61-00076A	SPRING ETC-TORSION DOC (CC2-F)	1	SA	
8.6-24	JC66-01119A	LEVER-M-ACTUATOR EMPTY	1	SA	
8.6-25	JC61-01481A	HOLDER-M-ACTUATOR EMPTY	1	SNA	
8.6-26	JC61-00018A	SPRING ETC-SENSOR	1	SNA	
8.6-27	JC66-01133A	LEVER-M-ACTUATOR FEED	1	SNA	
8.6-28	JC61-01480A	HOLDER-M-ACTUATOR FEED	1	SNA	
8.6-29	JC61-01546A	SPRING ETC-OPC LOCK L	1	SA	
8.6-32	JC92-01723A	PBA SUB-WASTE T	1	SA	
8.6-33	JC61-01451A	PLATE-P-GROUND OPC L	1	SNA	
8.6-34	JC61-01486A	PLATE-P-GROUND PICKUP	1	SNA	
8.6-35	JC63-00854A	COVER-M-GROUND OPC	1	SNA	
8.6-36	JC61-01477A	FRAME-M-EXIT	1	SNA	
8.6-37	6107-001163	SPRING-CS	3	SA	
8.6-38	JC61-01568A	HOLDER-M-EXIT F DOWN	3	SNA	
8.6-39	JC66-01149A	ROLLER-EXIT MAIN	3	SA	
8.6-40	JC92-01718A	PBA SUB-EXIT	1	SA	
8.6-41	JC66-01040A	ROLLER-EXIT F DOWN	1	SNA	
8.6-42	JC61-00829A	HOLDER-BEARING EXIT F/DOWN	2	SA	
8.6-43	6044-000159	RING-C	2	SA	
8.6-44	JC61-00424A	BUSH-4	1	SA	
8.6-45	JC72-41010A	PMO-HOUSING TERMINAL	1	SA	
8.6-46	JC70-10961A	IPR-TERMINAL FU	2	SA	

IT-spares.eu

Main Frame Parts List

SA : SERVICE AVAILABLE, SNA : SERVICE not AVAILABLE

Drawer#	SEC Code	Description	QT'y	Service	Remark
8.6-47	JC39-00581A	CBF HARNESS-FUSER AC	1	SA	
8.6-48	6006-000127	SCREW-MACHINE	2	SNA	
8.6-49	6021-000222	NUT-HEXAGON	2	SNA	
8.6-50	JC66-01207A	SHAFT-M-CLUTCH FUSER	1	SA	
8.6-51	JC47-00014A	MEP-CLUTCH CAM	1	SA	
8.6-52	JC61-01566A	HOLDER-M-CLUTCH FUSER	1	SNA	
8.6-53	JC39-00498A	CBF HARNESS-COVER S/W	1	SA	
8.6-54	JC39-00497A	CBF HARNESS-INLET	1	SA	
8.6-55	JC47-00009C	MEP-CLUTCH REGI	1	SA	
8.6-56	6031-001255	WASHER-PLAIN	1	SA	
8.6-58	JC97-02688A	MEA UNIT-PICK UP GEAR	1	SA	
8.6-58-1	JC66-01076A	GEAR-PICK UP A	1	SA	
8.6-58-2	JC66-01077A	GEAR-PICK UP B	1	SA	
8.6-58-3	6107-001167	SPRING-CS	1	SA	
8.6-59	JC61-01478A	GUIDE-M-HARNESS	1	SNA	
8.6-60	JC61-70911A	SPRING ETC-EXIT ROLL FD	2	SA	
8.6-61	JC61-01548A	HOLDER-M-CAM	1	SNA	
8.6-62	JC66-01120A	SHAFT-FEED IDLE	1	SNA	
8.6-63	JC61-00699A	BUSH-D6/L4	2	SA	
8.6-64	JC66-01128A	ROLLER-REGI	1	SNA	
8.6-65	6044-000125	RING-E	2	SA	
8.6-66	JC61-01570A	GUIDE-M-PAPER	2	SNA	
8.6-67	JC97-02647A	MEA UNIT-PICKUP ROLL	1	SA	
8.6-67-1	JC66-01080A	SHAFT-P-PICKUP	1	SNA	
8.6-67-2	JC66-01105A	CAM-M-PICK UP	2	SNA	
8.6-67-3	JC61-01151A	HOUSING-M-PICK U	1	SA	
8.6-67-4	JC61-01173A	HOUSING-M-PICK UP B	1	SA	
8.6-67-5	JC73-00211A	RUBBER-PICK UP	1	SA	
8.6-68-1	JC61-01473A	GUIDE-M-PICK UP	1	SNA	
8.6-68-2	JC61-01787A	HOLDER-PAD	1	SNA	
8.6-68-3	JC61-70911A	SPRING ETC-EXIT ROLL FD	2	SA	
8.6-68-4	JC69-00961A	PAD-FRICTION	1	SA	
8.6-68-5	JC66-00815A	LEVER-M-KICKER P/U	2	SA	
8.6-69	JC61-01790A	PLATE-PICK UP	1	SNA	
8.6-70	JC66-01216A	PULLEY-P PICK UP	1	SNA	
8.6-71	6602-001528	BELT-FLAT RUBBER	1	SA	
8.6-72	JC66-01217A	PULLEY-M REGI	1	SNA	
8.6-73	JC72-00382B	PMO-BUSHING FEED	2	SA	
8.6-77	6044-000001	RING-CS	2	SNA	
8.6-79-1	JC66-01212A	GEAR-FEED	1	SNA	
8.6-79-2	JC61-01667A	BUSH-M CLUTCH	1	SNA	
8.6-A	JC97-02639A	MEA UNIT-FU TERMINAL	1	SA	

IT-spares.eu

8.7 LSU Cover

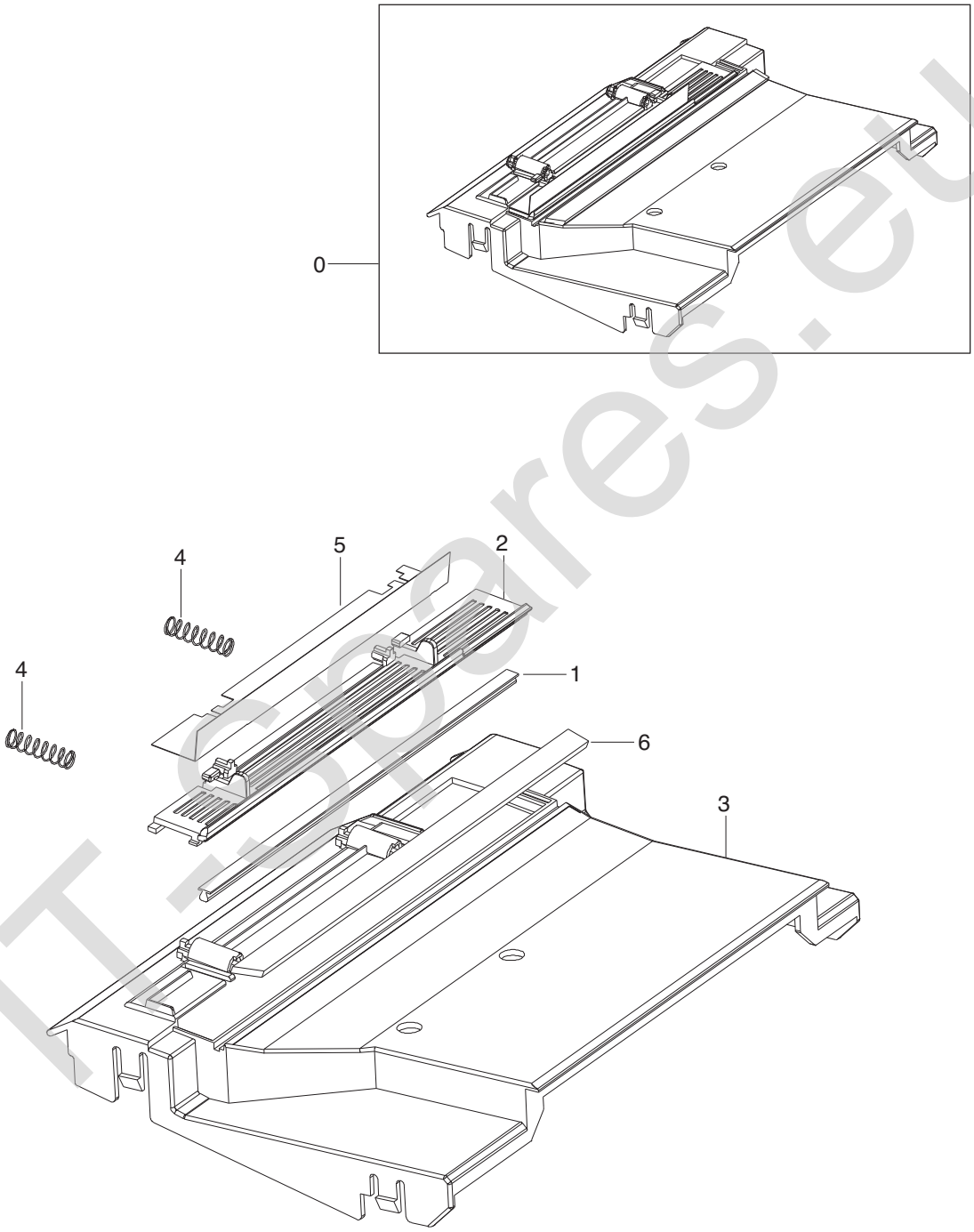

IT-spares.eu

LSU Cover Parts List

SA : SERVICE AVAILABLE, SNA : SERVICE not AVAILABLE

Drawer#	SEC Code	Description	QT'y	Service	Remark
8.7-0	JC97-02656A	MEA UNIT-COVER LSU	1	SA	
8.7-1	JC67-00168A	BRUSH-LSU	1	SNA	
8.7-2	JC64-00267A	SHUTTER-LSU	1	SNA	
8.7-3	JC63-00839A	COVER-M-LSU	1	SNA	
8.7-4	6107-001169	SPRING-CS	2	SNA	
8.7-5	JC63-01093A	SHEET-LSU FRONT	1	SNA	
8.7-6	JC62-00338A	SEAL-COVER LSU	1	SNA	

IT-Spares.eu

8.8 Fuser Unit

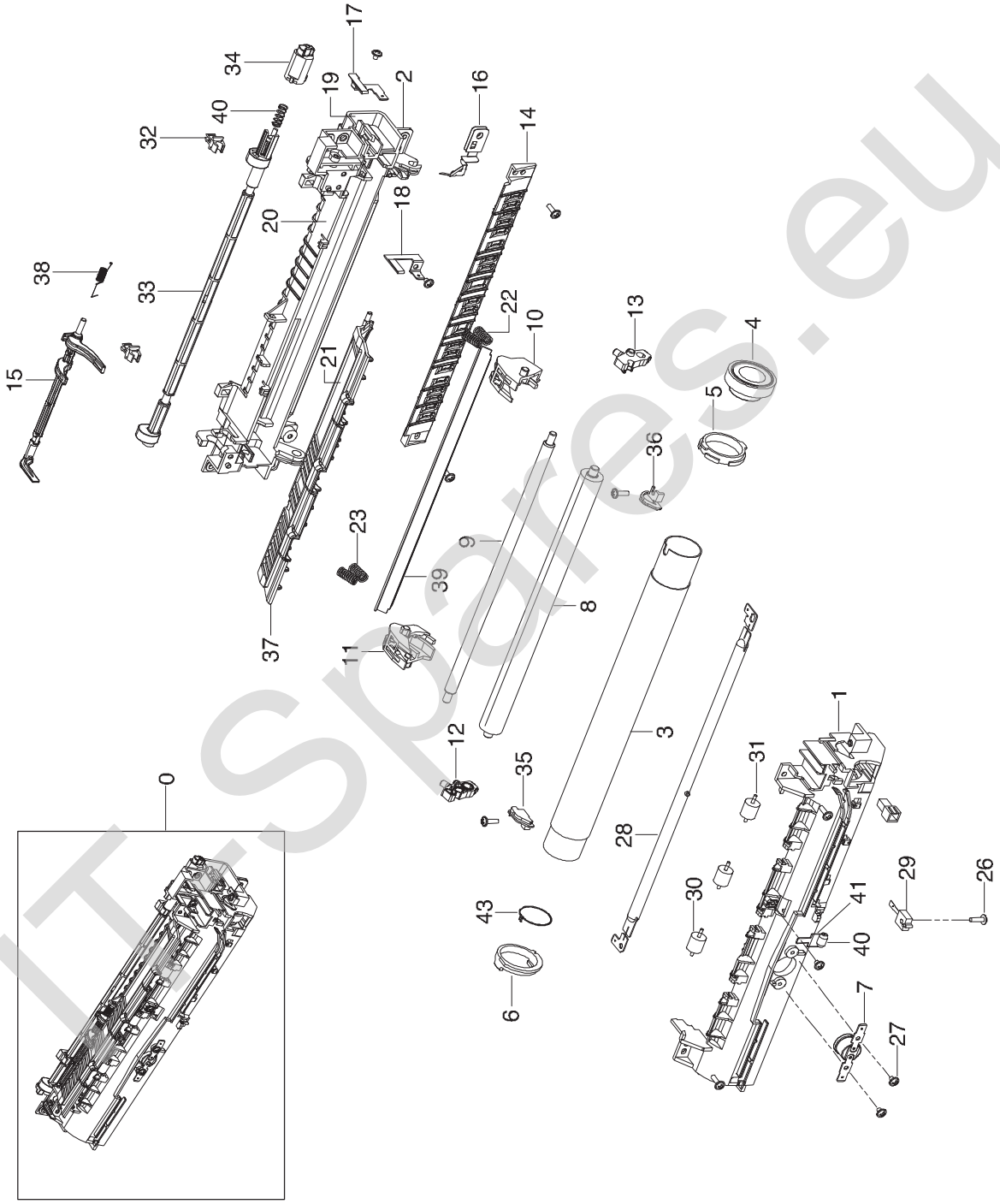

IT-Spares.eu

Fuser Unit Parts List

SA : SERVICE AVAILABLE, SNA : SERVICE not AVAILABLE

Drawer#	SEC Code	Description	QT'y	Service	Remark
8.8-0	JC96-03609A	ELA UNIT-FUSER 220V	1	SA	220V
8.8-0	JC96-03609B	ELA UNIT-FUSER 110V	1	SA	110V
8.8-1	JC61-01474A	FRAME-M-UPPER FUSER	1	SNA	
8.8-2	JC61-01475A	FRAME-M-LOWER FUSER	1	SNA	
8.8-3	JC66-01078A	ROLLER-HEAT	1	SNA	
8.8-4	JC66-00669A	GEAR-FUSER	1	SA	
8.8-5	JC66-10902A	BEARING-H/R L	1	SA	
8.8-6	JC72-00814A	PMO-BEARING H/R-F	1	SA	
8.8-7	4712-001027	THERMOSTAT	1	SA	
8.8-8	JC66-01079A	ROLLER-PRESSURE	1	SNA	
8.8-9	JC66-01111A	ROLLER-PRESSURE SHAFT	1	SNA	
8.8-10	JC61-01490A	HOLDER-M-BUSH 2PR R	1	SNA	
8.8-11	JC61-01491A	HOLDER-M-BUSH 2PR L	1	SNA	
8.8-12	JC61-01534A	BUSH-M-2PR L	1	SNA	
8.8-13	JC61-01535A	BUSH-M-2PR R	1	SNA	
8.8-14	JC61-01522A	GUIDE-M-INPUT FUSER	1	SNA	
8.8-15	JC66-01110A	LEVER-M-ACTUATOR EXIT	1	SNA	
8.8-16	JC61-01476A	PLATE-P-GROUND FUSER	1	SNA	
8.8-17	JC70-00518A	ELECTRODE-P-AC R	1	SNA	
8.8-18	JC70-00519A	ELECTRODE-P-AC L	1	SNA	
8.8-19	JC68-00407A	LABEL(R)-HV FUSER	1	SNA	220V
8.8-19	JC68-00408A	LABEL(R)-LV FUSER	1	SNA	110V
8.8-20	JC68-01584A	LABEL(P)-BLANK 90*25	1	SNA	
8.8-21	JC68-01581A	LABEL(P)-CAUTION HOT	2	SNA	
8.8-22	6107-001169	SPRING-CS	2	SNA	
8.8-23	6107-001169	SPRING-CS	2	SA	
8.8-24	JC39-00500A	CBF HARNESS-FUSE LINK1	2	SA	
8.8-25	JC39-00501A	CBF HARNESS-FUSE LINK2	1	SA	
8.8-27	6003-000152	SCREW-TAPTITE	5	SNA	
8.8-28	4713-001210	LAMP-HALOGEN	1	SA	220V
8.8-28	4713-001209	LAMP-HALOGEN	1	SA	110V
8.8-29	1404-001368	THERMISTOR-NTC ASSY	1	SA	
8.8-30	JC70-00064A	IPR-PIN ROLLER EXIT	3	SNA	
8.8-31	JC72-20902A	PEX-ROLLER F/UP(2)	3	SA	
8.8-32	JC72-00382A	PMO-BUSHING TX	2	SNA	
8.8-33	JC66-01206A	SHAFT-M-CAM FUSER	1	SNA	
8.8-34	JC61-01647A	HOLDER-M-SHAFT FUSER	1	SNA	
8.8-35	JC66-01147A	LEVER-M-RELEASE	1	SNA	
8.8-36	JC66-01148A	LEVER-M-LINK FUSER	1	SA	
8.8-37	JC61-01523A	GUIDE-M-OUTPUT FUSER	1	SNA	
8.8-38	JC61-01271A	SPRING ETC-ACTUATOR	1	SA	
8.8-39	JC97-02778A	MEA UNIT-GUIDE PR	1	SNA	
8.8-40	6107-001169	SPRING-CS	1	SA	
8.8-41	JC66-01309A	ROLLER-DUMMY	1	SNA	

IT-spares.eu

Fuser Unit Parts List

SA : SERVICE AVAILABLE, SNA : SERVICE not AVAILABLE

Drawer#	SEC Code	Description	QT'y	Service	Remark
8.8-42	JC61-01685A	SPRING ETC-DUMMY	1	SA	
8.8-43	JC61-01679A	SPRING ETC-GROUND	1	SA	

IT-Spares.eu

8.9 ELA-UNIT OPC DEV

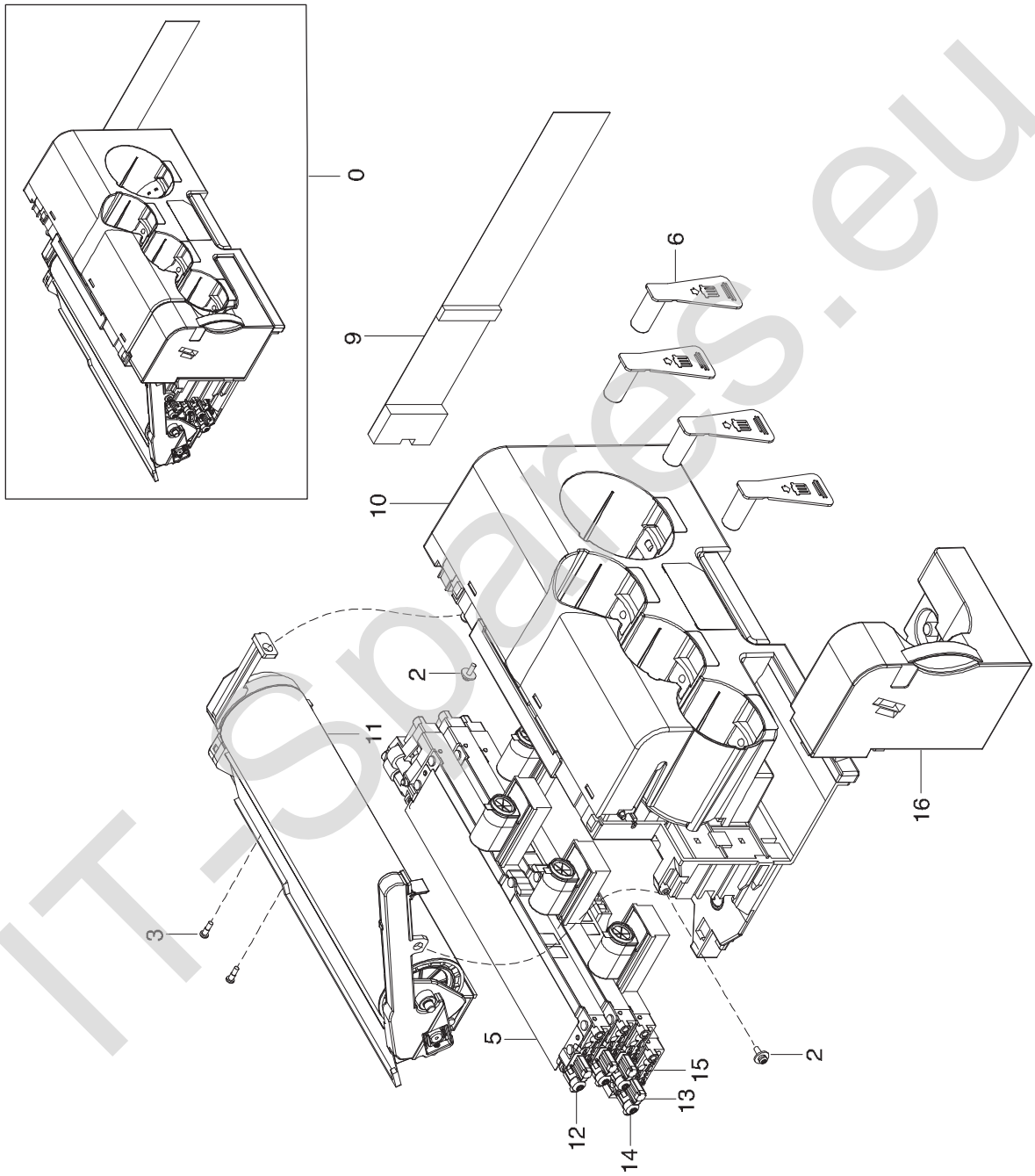

IT-Spares.eu

ELA-UNIT OPC DEV Parts List

SA : SERVICE AVAILABLE, SNA : SERVICE not AVAILABLE

Drawer#	SEC Code	Description	QT'y	Service	Remark
8.9-0	JC96-03610F	ELA UNIT-OPC DEV SET	1	SNA	
8.9-2	6003-000152	SCREW-TAPTITE	2	SNA	
8.9-3	6009-001396	SCREW-SPECIAL	2	SNA	
8.9-4	JC39-00499A	CBF HARNESS-JOIN DRAW	1	SNA	
8.9-5	JC63-01142A	SHEET-FILM YELLOW UP	1	SNA	
8.9-6	JC67-00199A	CAP-DEVE	4	SA	
8.9-7	JC68-01898A	LABEL-INFORMATION	1	SNA	
8.9-8	JC68-10914D	LABEL(P)-SERIAL NO	1	SNA	
8.9-9	JC69-01013A	CUSHION-DEVE	1	SNA	
8.9-10	JC96-03911F	ELA UNIT-DEV MAIN SET	1	SNA	
8.9-11	JC97-02571C	MEA UNIT-OPC SET	1	SNA	
8.9-12	JC97-02613A	MEA UNIT-DEV Y	1	SA	
8.9-13	JC97-02614A	MEA UNIT-DEV M	1	SA	
8.9-14	JC97-02615A	MEA UNIT-DEV C	1	SA	
8.9-15	JC97-02616A	MEA UNIT-DEV K	1	SA	
8.9-16	JC97-02619A	MEA UNIT-TONER WASTE	1	SA	

IT-Spares.eu

8.10 ITB Unit

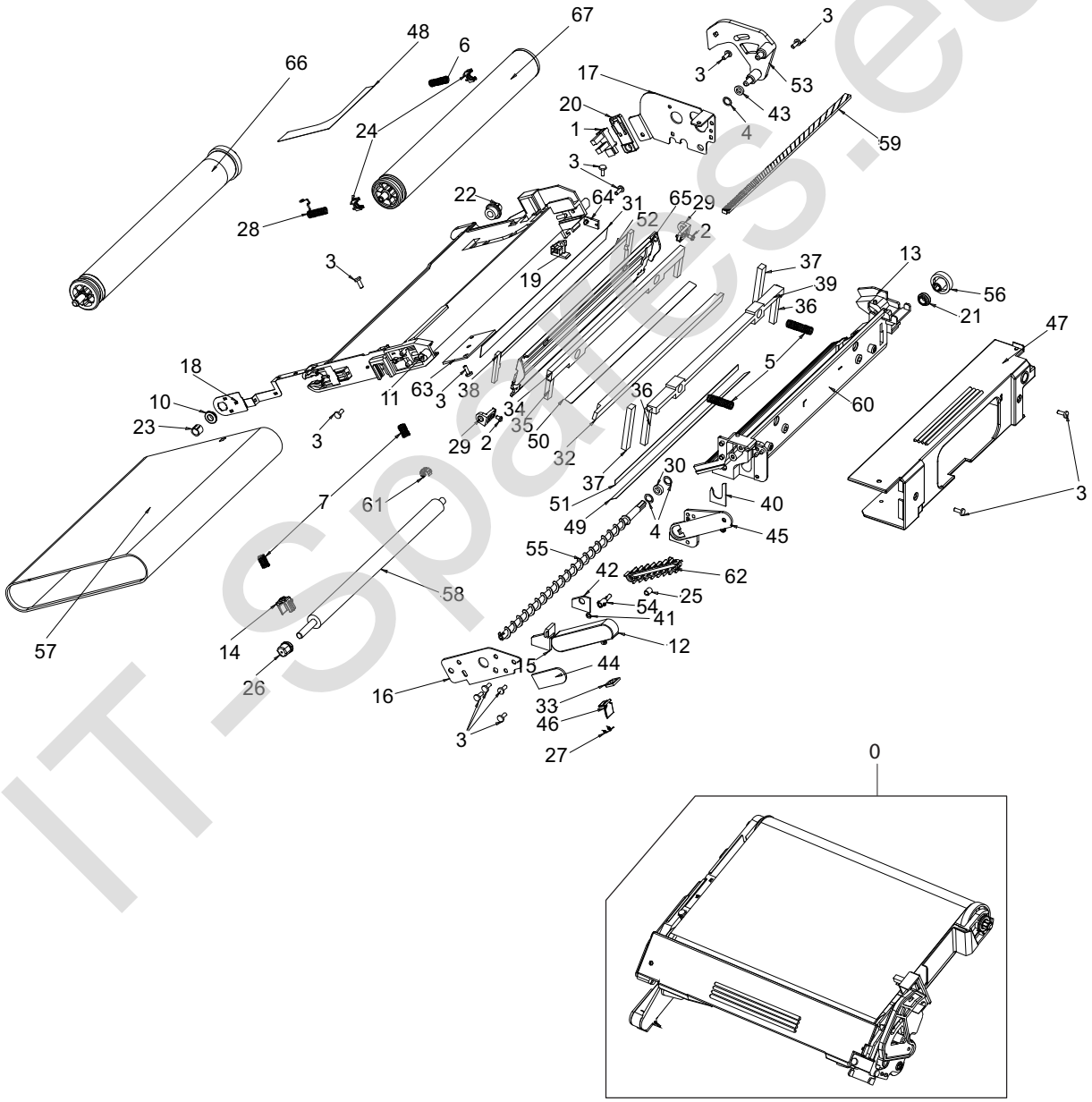

IT-spares.eu

ITB Unit Parts List

Drawer#	SEC_CODE	DESCRIPTION	QT'Y	Service	Remark
8.10-0	JC96-03611A	ELA UNIT-ITB_SET	1	SA	
8.10-1	0604-001257	PHOTO-INTERRUPTER	1	SNA	
8.10-2	6001-000485	SCREW-MACHINE	2	SNA	
8.10-3	6003-000282	SCREW-TAPTITE	13	SA	
8.10-4	6031-000019	WASHER-PLAIN	3	SA	
8.10-5	6107-001306	SPRING-CS	2	SA	
8.10-7	6107-001313	SPRING-CS	1	SNA	
8.10-10	JC61-00699A	BUSH-D6/L4	1	SA	
8.10-11	JC61-01494A	FRAME-M-ITB	1	SNA	
8.10-12	JC61-01495A	FRAME-M-WASTE ITB	1	SNA	
8.10-13	JC61-01497A	HOUSING-M-CLEANING ITB	1	SNA	
8.10-14	JC61-01498A	HOLDER-M-BUSH CHARGE	1	SNA	
8.10-15	JC61-01499A	GUIDE-M-POLE ITB	1	SNA	
8.10-16	JC61-01502A	BRACKET-P-HOUSING LEFT	1	SNA	
8.10-17	JC61-01503A	BRACKET-P-HOUSING RIGHT	1	SNA	
8.10-18	JC61-01504A	PLATE-P-GND ITB	1	SNA	
8.10-19	JC61-01505A	HOLDER-M-PTL	1	SNA	
8.10-20	JC61-01506A	HOLDER-M-HOME SENSOR	1	SNA	
8.10-21	JC61-01536A	BUSH-M-CHARGE CLEANING	1	SNA	
8.10-22	JC61-01539A	BUSH-M-DRIVE ITB	1	SNA	
8.10-23	JC61-01540A	BUSH-M-ITB	1	SNA	
8.10-24	JC61-01541A	BUSH-M-TR ITB	2	SNA	
8.10-25	JC61-01542A	BUSH-M-IDLER WASTE BELT	1	SNA	
8.10-26	JC61-01543A	BUSH-CHARGE LEFT	1	SNA	
8.10-27	JC61-01701A	SPRING ETC-SHUTTER	1	SNA	
8.10-28	JC61-01704A	SPRING ETC-GROUND ITB	1	SNA	
8.10-29	JC61-01777A	HOLDER-BLADE ITB	2	SNA	
8.10-30	JC62-00210A	SEAL-AUGER OPC	1	SNA	
8.10-31	JC62-00212A	SEAL-BELT ITB	1	SNA	
8.10-32	JC62-00213A	SEAL-LOW ITB	1	SNA	
8.10-33	JC62-00217A	SEAL-COVER WASTE	1	SNA	
8.10-34	JC62-00219A	SEAL-BACK ITB	1	SNA	
8.10-35	JC62-00221A	SEAL-BACK ITB RIGHT	2	SNA	
8.10-36	JC62-00222A	SEAL-SIDE ITB LEFT	2	SNA	
8.10-37	JC62-00223A	SEAL-SIDE ITB RIGHT	2	SNA	
8.10-38	JC62-00229A	SEAL-BLADE ITB LEFT	2	SNA	
8.10-39	JC62-00232A	SEAL-TOP ITB	1	SNA	
8.10-40	JC62-00257A	SEAL-FRAME WASTE ITB	1	SNA	
8.10-41	JC62-00258A	SEAL-WASTE OPC	1	SNA	
8.10-42	JC62-00281A	SEAL-HOUSING ITB L	1	SNA	
8.10-43	JC62-00282A	SEAL-HOUSING ITB R	1	SNA	

ITscares.eu

ITB Unit Parts List

SA : SERVICE AVAILABLE, SNA : SERVICE not AVAILABLE

Drawer#	SEC_CODE	DESCRIPTION	QT'Y	Service	Remark
8.10-44	JC62-00326A	SEAL-WASTE SIDE	1	SNA	
8.10-45	JC63-00857A	COVER-M-WASTE ITB	1	SNA	
8.10-46	JC63-00859A	COVER-M-WASTE EXIT	1	SNA	
8.10-47	JC63-00862A	COVER-M-HANDLE ITB	1	SNA	
8.10-48	JC63-01045A	SHEET-FRAME ITB	1	SNA	
8.10-49	JC63-01049A	SHEET-HOUSING ITB	1	SNA	
8.10-50	JC63-01110A	SHEET-BRACKET ITB	1	SNA	
8.10-51	JC63-01124A	SHEET-HOUSING ITB F	1	SNA	
8.10-52	JC63-01170A	SHEET-BLADE ITB	1	SNA	
8.10-53	JC66-01082A	ARM-M-BLADE ITB	1	SNA	
8.10-54	JC66-01083A	SHAFT-M-BELT WASTE	1	SNA	
8.10-55	JC66-01085A	SHAFT-M-AUGER ITB	1	SNA	
8.10-56	JC66-01087A	GEAR-AUGER ITB	1	SNA	
8.10-57	JC66-01131A	ROLLER-T1	1	SNA	
8.10-58	JC66-01112A	DRUM-ITB BELT	1	SNA	
8.10-59	JC67-00027A	LENS-PTL	1	SA	
8.10-60	JC68-10914D	LABEL(P)-SERIAL NO	1	SNA	
8.10-61	JC72-40332A	PMO-BUSHING_CHARGE	1	SNA	
8.10-62	JC73-00222A	RUBBER-BELT WASTE ITB	1	SNA	
8.10-63	JC92-01709A	PBA SUB-ITB_JOINT	1	SNA	
8.10-64	JC92-01724A	PBA SUB-PTL	1	SNA	
8.10-65	JC97-02645A	MEA UNIT-BLADE ITB	1	SNA	
8.10-66	JC97-02646A	MEA UNIT-ROLL DRV ITB	1	SNA	
8.10-67	JC97-02695A	MEA UNIT-ROLL IDL ITB	1	SNA	
-	JC39-00489A	CBF HARNESS-ITB_JOINT	1	SNA	
-	JC39-00502A	CBF HARNESS-ITB_HOME	1	SNA	

IT-Service.eu

8.11 Casstte Unit

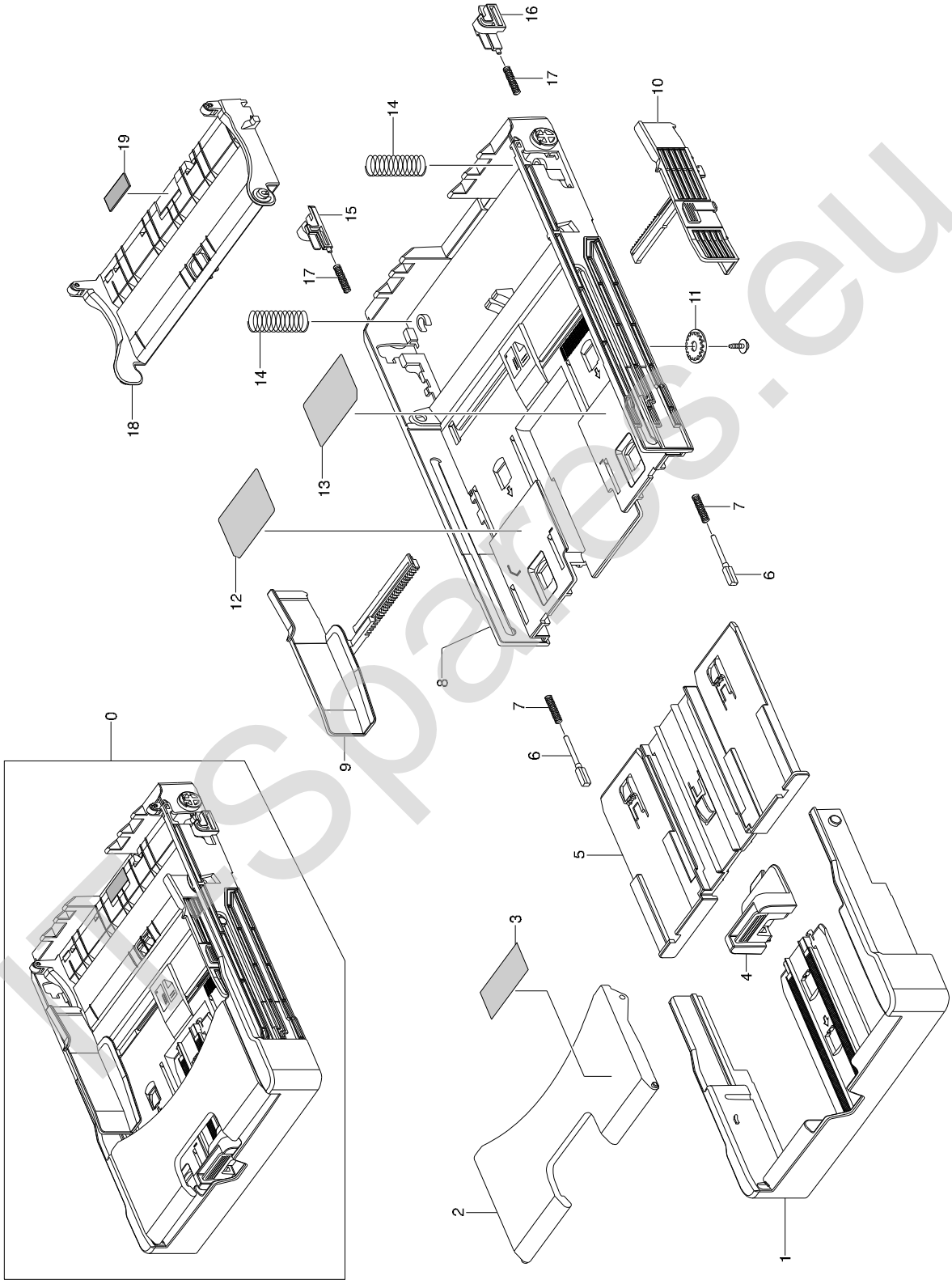

ITSpares.eu

Cassette Unit Parts List

SA : SERVICE AVAILABLE, SNA : SERVICE not AVAILABLE

Drawer#	SEC Code	Description	QT'y	Service	Remark
8.11-0	JC97-02332A	MEA-UNIT CASSETTE	1	SA	
8.11-1	JC63-00869A	TRAY-M-EXTENSION SMALL	1	SNA	
8.11-2	JC63-00855A	COVER-M-CASSETTE	1	SA	
8.11-3	JC68-00780A	LABEL-WARNING	1	SNA	
8.11-4	JC61-01531A	STOPPER-PAPER REAR	1	SNA	
8.11-5	JC63-00872A	TRAY-M-EXIT CASSETTE	1	SNA	
8.11-8	JC61-01530A	FRAME-M-SEMI CASSETTE	1	SNA	
8.11-9	JC70-00516A	ADJUST-M-CASSETTE R	1	SA	
8.11-10	JC70-00517A	ADJUST-M-CASSETTE L	1	SA	
8.11-11	JG66-40003A	GEAR-PINION	1	SA	
8.11-12	JC68-01680A	LABEL-INSTRUCTION	1	SNA	
8.11-13	JC68-01679A	LABEL-INSTRUCTION	1	SNA	
8.11-14	6107-001240	SPRING-CS	2	SNA	
8.11-15	JC64-00223A	LOCKER-M-KNOCK UP L	1	SA	
8.11-16	JC64-00222A	LOCKER-M-KNOCK UP R	1	SA	
8.11-17	JG61-70531A	SPRING ETC-LOCKER,PLATE	2	SA	
8.11-18	JC61-01158A	PLATE-M-KNOCK UP	1	SA	

IT-Spares.eu